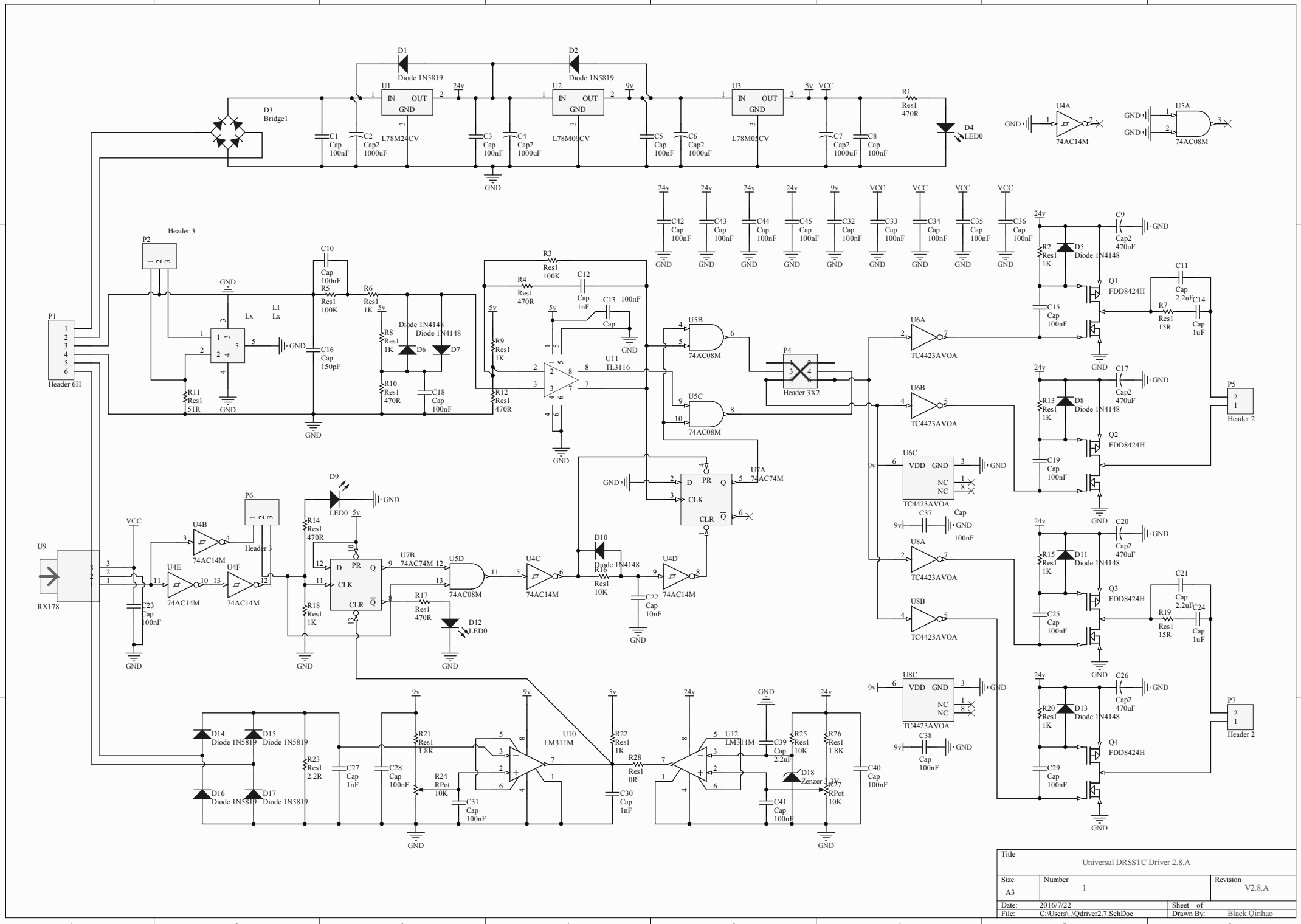

Title		
Universal DRSSTC Driver 2.8.A		
Size A3	Number 1	Revision V2.8.A
Date: 2016/7/22	Sheet of	
File: C:\Users\..\Qdriver2.7.SchDoc	Drawn By: Black Qinhao	